This document and its contents are the property of Innovative Water Systems LLC. and must not be copied, reproduced or disclosed to any third party without prior written permission. Contravention will be prosecuted.

RevNo:	Revision note:	Date:	Signature:	Checked:

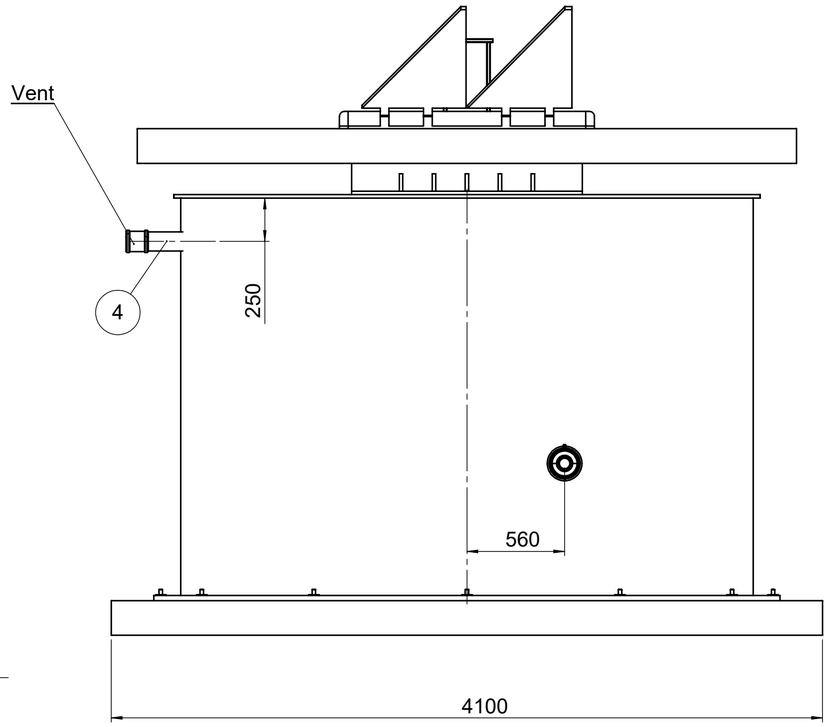

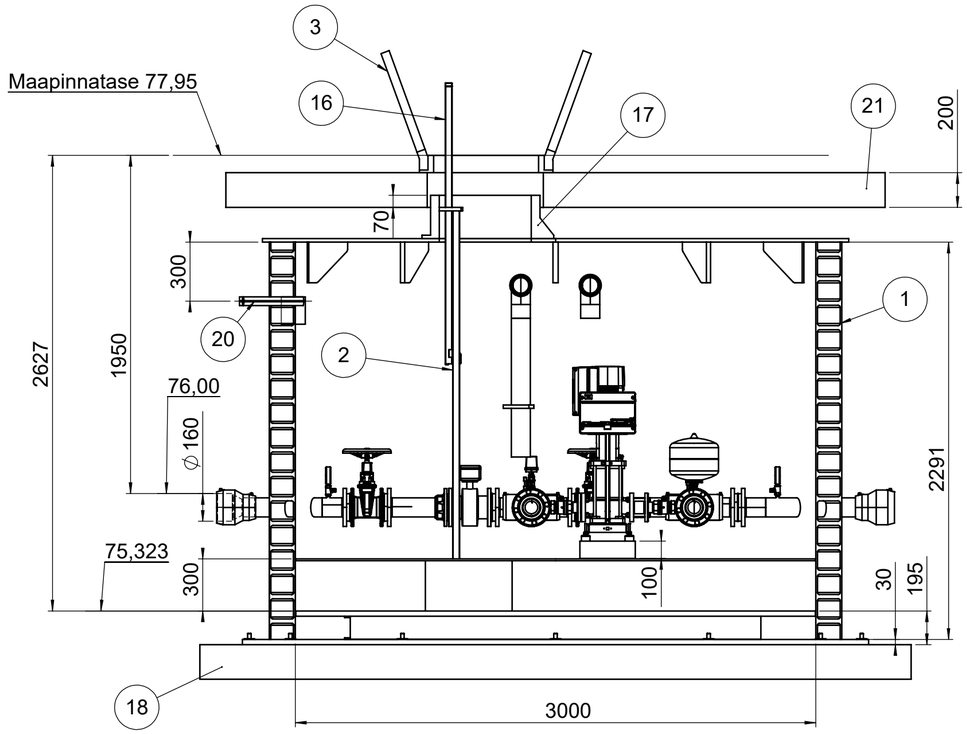

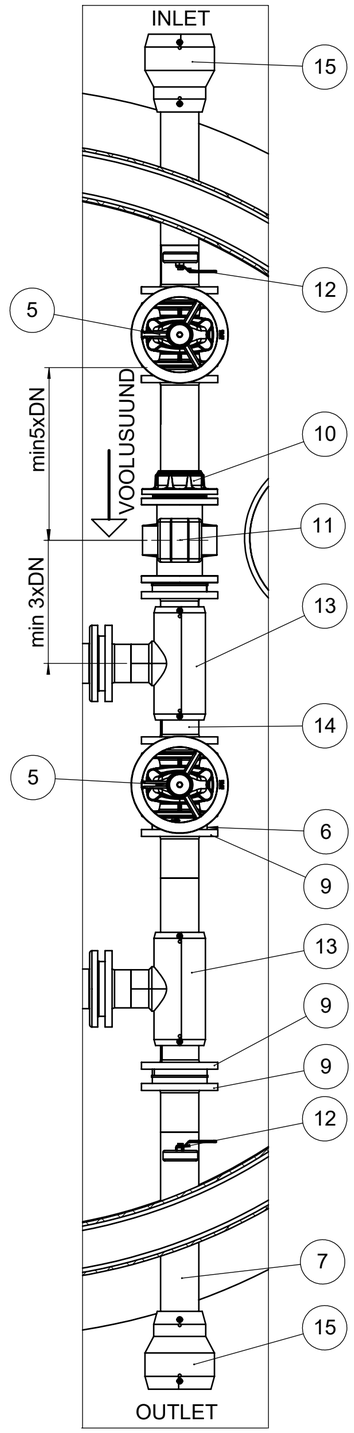

K (2 : 25)

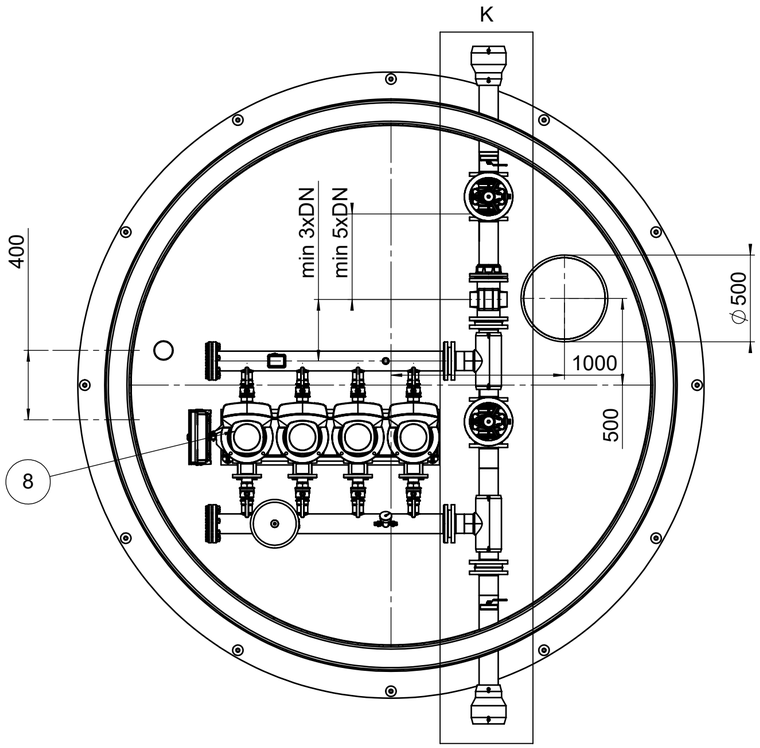

Pos	NImetus	Materjal, tüüp	Mõõdud
1	Spiraaltoru	PE	ID3000 (2291)
2	Redel, libisemiskindlate astmetega	AISI316	300x280x2000
3	Luuk	Malm	1470(1220)x770(605)x100
4	Ventilatsiooni toru	PE	D110
5	Kummkiilsiiber AVK	Malm, epoksiidikattega	DN100
6	Tagasilöögiklapp-ääriktue vaheline	-	DN100
7	Survetorustik	PE	D110 SDR17
8	Survetõstepump	-	HYDRO MULTI-E 4 CRE15-4
9	Äärikud	PP/Teras	DN100
10	Tõmbekindel kiirliite äärik	-	DN100
11	Kulumõõtja	SIEMENS	DN100
12	Kuulkraan 1/2, manomeeter	AISI316	1/2"
13	EL.keevis kolmik	PE	DN100
14	Kaelus	PE	DN100
15	Üleminek	PE	D110-D160
16	Käsipuu, teleskoopne	AISI316	280x1620
17	Teenindusava	PE	615x530
18	Betoonplaat	Raudbetoon	4100x4100x200
19	Poldid, mutrid, seibid	AISI316	M16
20	Kaabli läbiviigud	PE	D50 SDR17
21	Koormustasandus plaat	Raudbetoon	4100x4100x200

Drw: K.Käbi 17.11.2020	Size,std:	Tolerance:	Geometric tolerance symbols acc. ISO1101 General tolerance symbols acc. ISO2768 Surface roughness symbols acc. ISO1302
Chk:	Material: Unspec.		
App:	Finish: Unspec.	Part ref:	
Prod:	Rõhutõstepumpla ID3000 STRONG Grundfos-Võru RTP		
Sheet: 1/2	Size: A2		

Scale	Mass:kg	Metric:mm	Innovative Water Systems	All rights reserved. Copyright (C) 2001 IWS www.iws.ee	Drawing number:	Ver.	Rev.
1:25	0.00				L004869	0	2